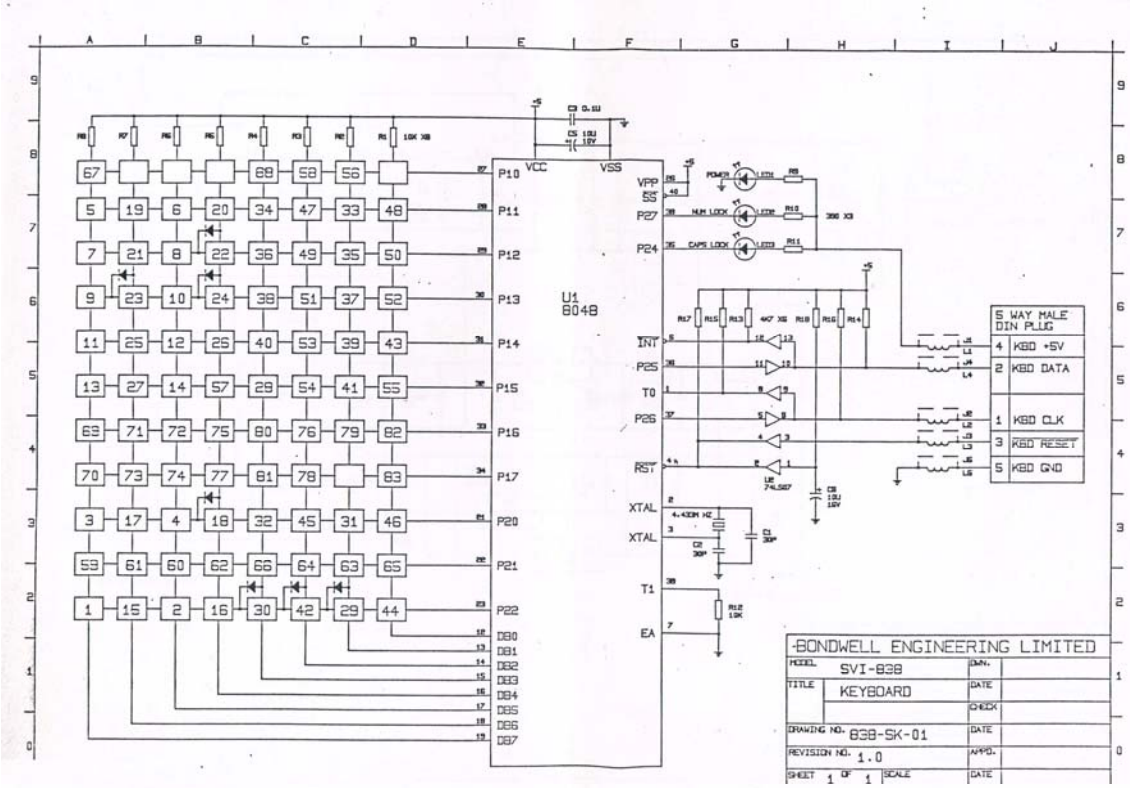
U1
8048
VCC
VSS
VPP
SS
P27
P24
INT
P25
T0
P26
RST
XTAL
XTAL
T1
EA
P10
P11
P12
P13
P14
P15
P16
P17
P20
P21
P22
DB0
DB1
DB2
DB3
DB4
DB5
DB6
DB7
POWER
NUM LOCK
CAPS LOCK
5 WAY MALE DIN PLUG
4 KBD +5V
2 KBD DATA
1 KBD CLK
3 KBD RESET
5 KBD GND
-BONDWELL ENGINEERING LIMITED
MODEL SVI-838
TITLE KEYBOARD
DRAWING NO. 838-SK-01
REVISION NO. 1.0
SHEET 1 OF 1
SCALE
DWN.
DATE
CHECK
DATE
APPD.
DATE

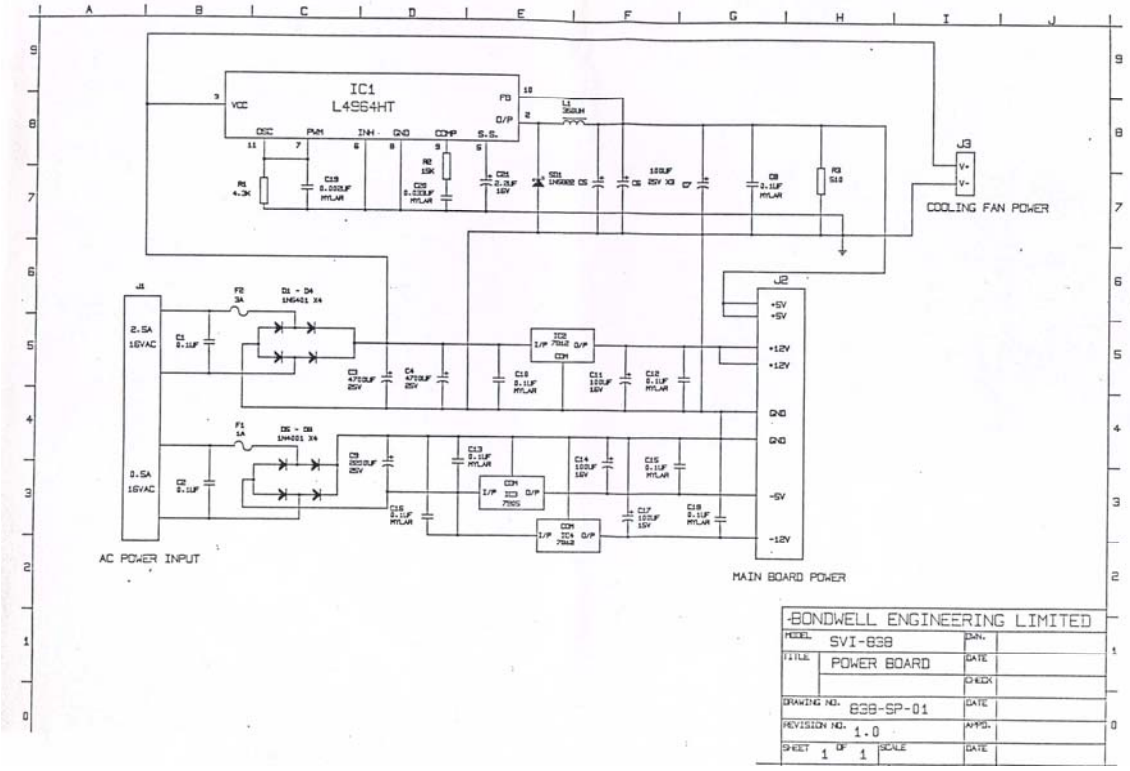
IC1
L4964HT
VCC
OSC
PWM
INH
GND
COMP
S.S.
FB
O/P
J3
V+
V-
COOLING FAN POWER
J1
2.5A
16VAC
0.5A
16VAC
AC POWER INPUT
J2
+5V
+5V
+12V
+12V
GND
GND
-5V
-12V
MAIN BOARD POWER
-BONDWELL ENGINEERING LIMITED
MODEL SVI-838
TITLE POWER BOARD
DRAWING NO. 838-SP-01
REVISION NO. 1.0
SHEET 1 OF 1
SCALE
DWN.
DATE
CHECK
DATE
APPD.
DATE

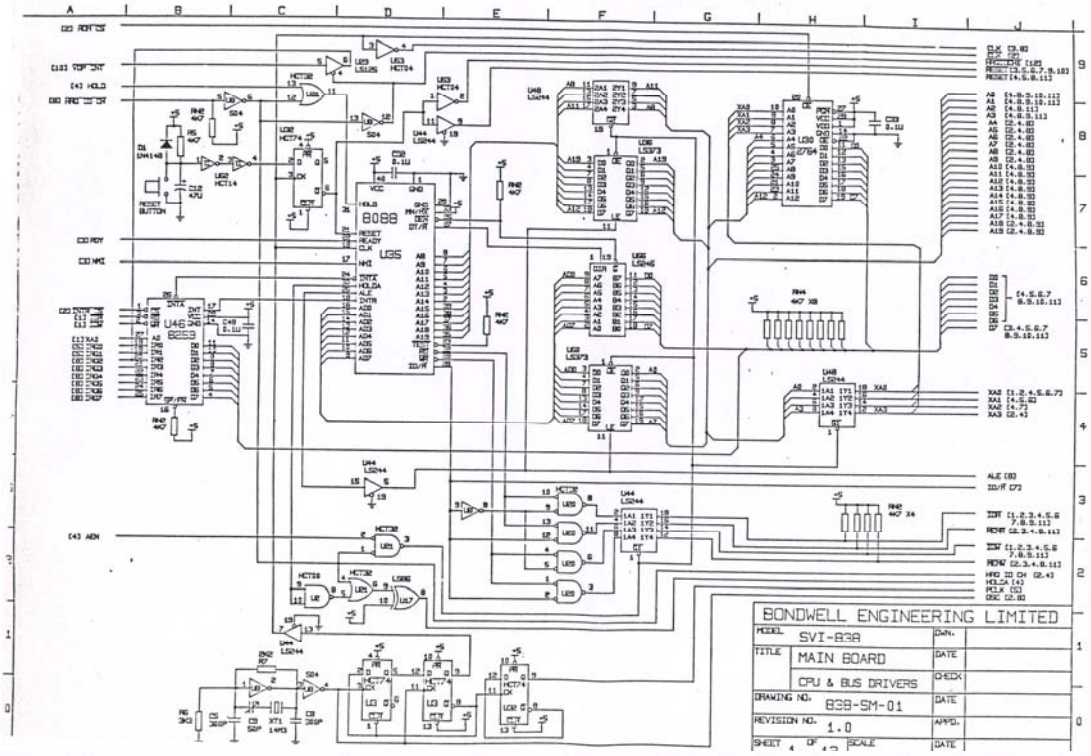
BONDWELL ENGINEERING LIMITED
MODEL SVI-838
TITLE MAIN BOARD
CPU & BUS DRIVERS
DRAWING NO. 838-SM-01
REVISION NO. 1.0
SHEET 4 OF 12
SCALE
DWN.
DATE
CHECK
DATE
APPD.
DATE

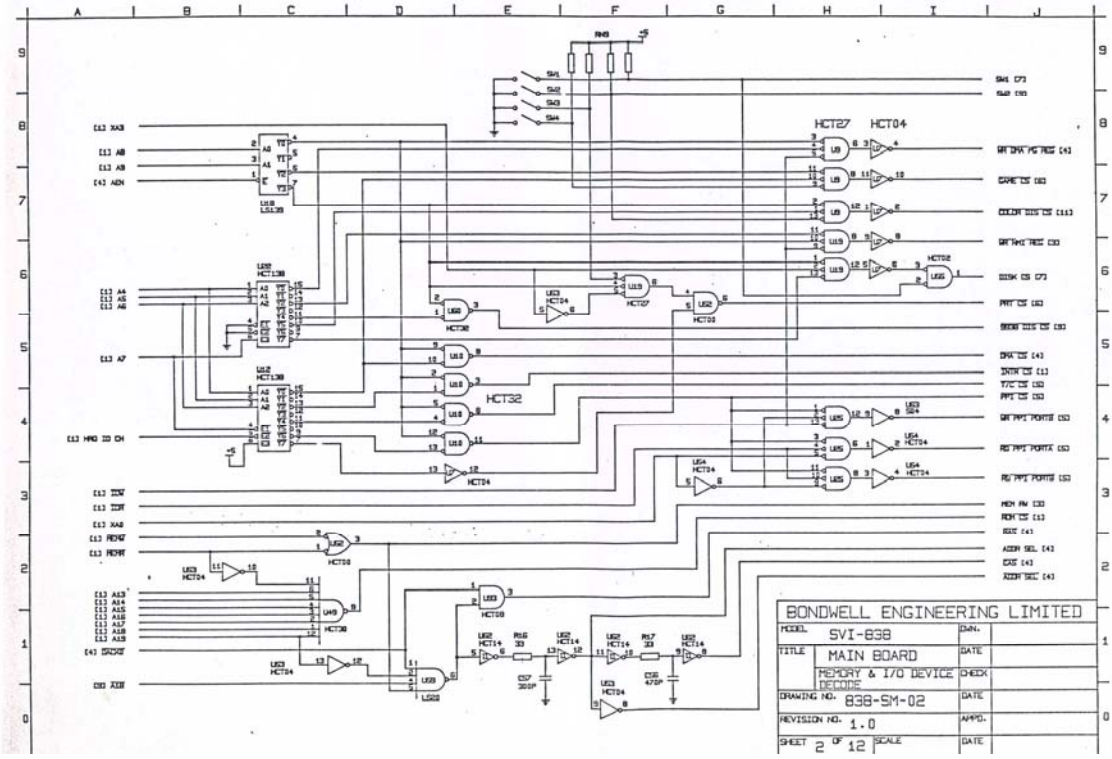
HCT27
HCT04
HCT32
BONDWELL ENGINEERING LIMITED
MODEL SVI-838
TITLE MAIN BOARD
MEMORY & I/O DEVICE DECODE
DRAWING NO. 838-SM-02
REVISION NO. 1.0
SHEET 2 OF 12
SCALE
DWN.
DATE
CHECK
DATE
APPD.
DATE

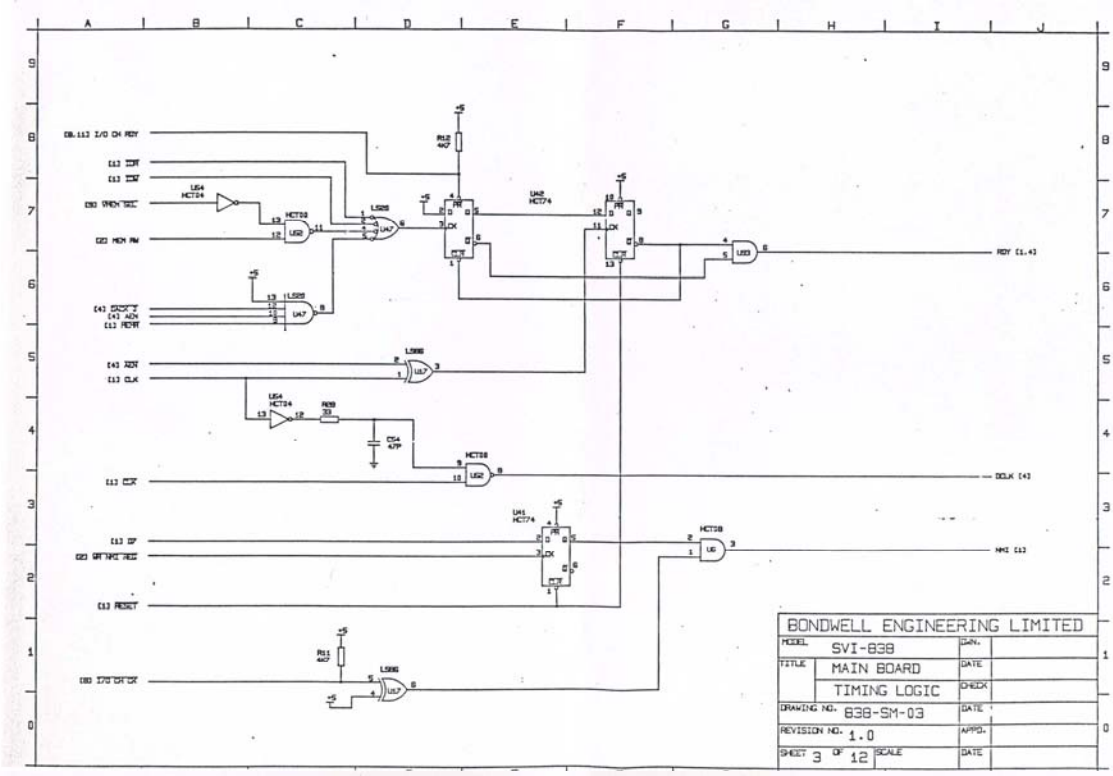
BONDWELL ENGINEERING LIMITED
MODEL SVI-838
TITLE MAIN BOARD
TIMING LOGIC
DRAWING NO. 838-SM-03
REVISION NO. 1.0
SHEET 3 OF 12
DATE
CHECK
APPD.
SCALE

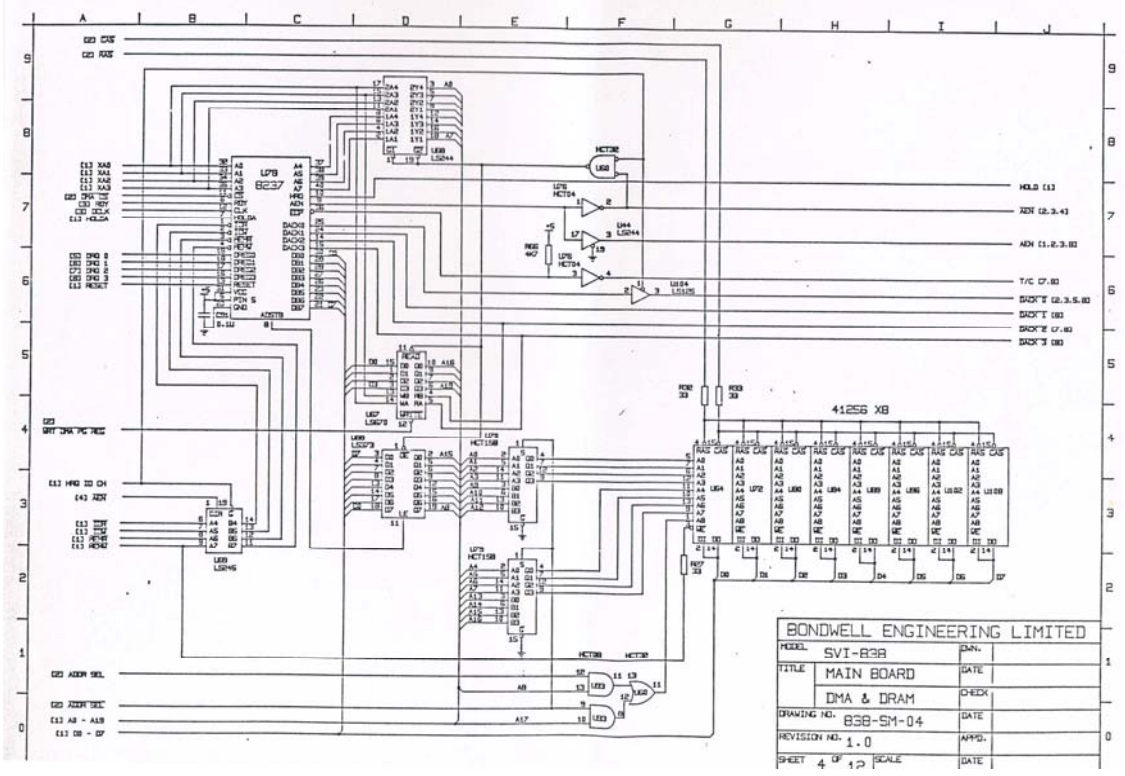
41256 X8
BONDWELL ENGINEERING LIMITED
MODEL SVI-838
TITLE MAIN BOARD
DMA & DRAM
DRAWING NO. 838-SM-04
REVISION NO. 1.0
SHEET 4 OF 12
DATE
CHECK
APPD.
SCALE

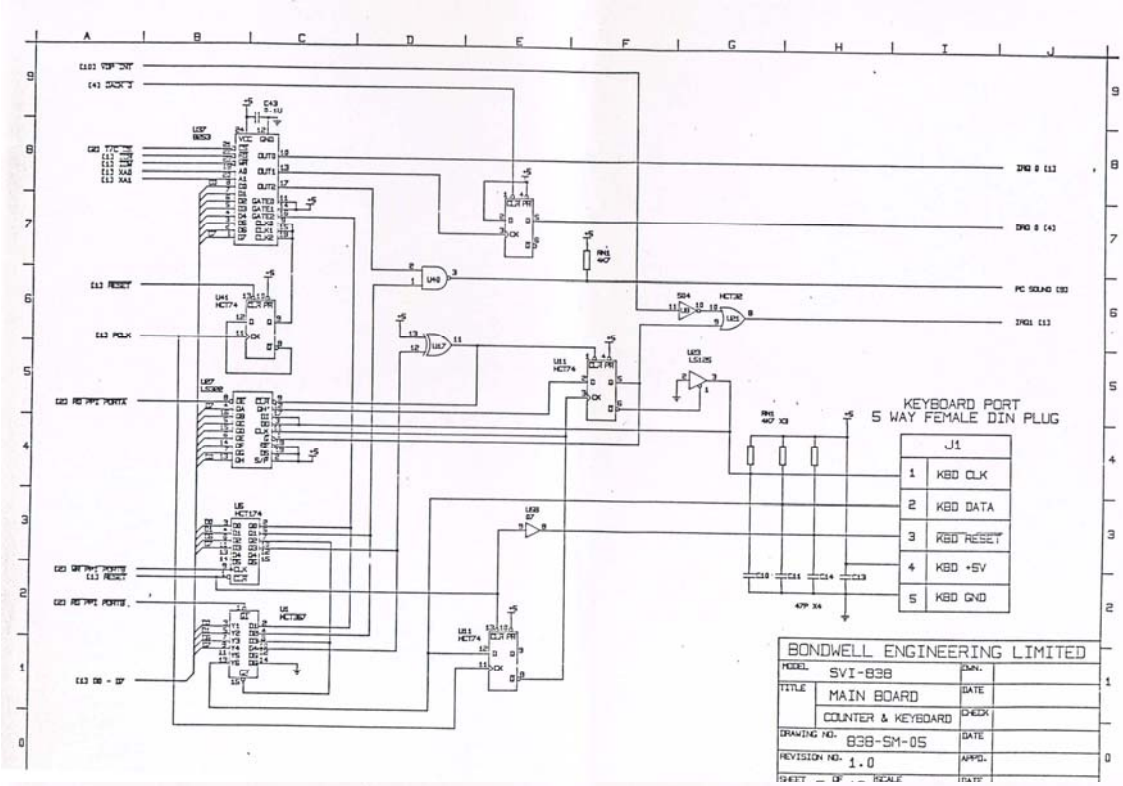
KEYBOARD PORT
5 WAY FEMALE DIN PLUG
J1
KBD CLK
KBD DATA
KBD RESET
KBD +5V
KBD GND
BONDWELL ENGINEERING LIMITED
MODEL SVI-838
TITLE MAIN BOARD
COUNTER & KEYBOARD
DRAWING NO. 838-SM-05
REVISION NO. 1.0

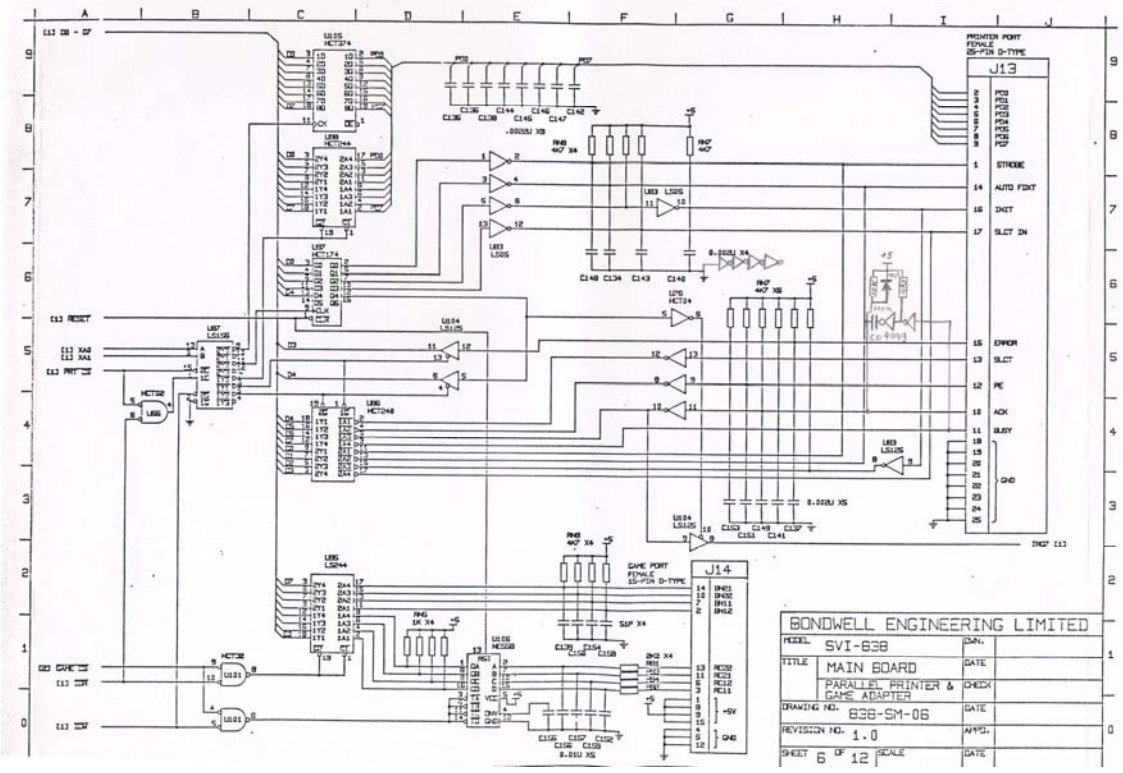
PRINTER PORT
FEMALE
25-PIN D-TYPE
J13
STROBE
AUTO FDXT
INIT
SLCT IN
ERROR
SLCT
PE
ACK
BUSY
GAME PORT
FEMALE
15-PIN D-TYPE
J14
BONDWELL ENGINEERING LIMITED
MODEL SVI-838
TITLE MAIN BOARD
PARALLEL PRINTER &
GAME ADAPTER
DRAWING NO. 838-SM-06
REVISION NO. 1.0
SHEET 6 OF 12

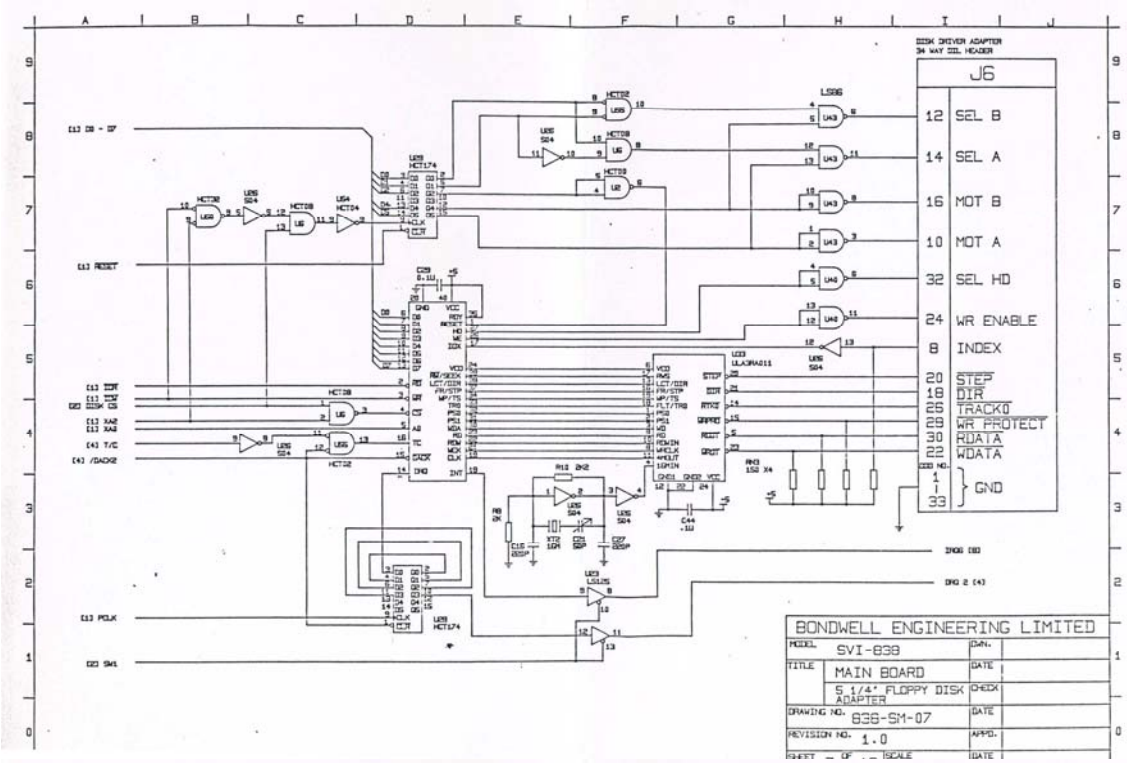
DISK DRIVER ADAPTER
34 WAY IDL HEADER
J6
12 SEL B
14 SEL A
16 MOT B
10 MOT A
32 SEL HD
24 WR ENABLE
8 INDEX
20 STEP
18 DIR
26 TRACK0
28 WR PROTECT
30 RDATA
22 WDATA
GND
BONDWELL ENGINEERING LIMITED
MODEL SVI-838
TITLE MAIN BOARD
5 1/4" FLOPPY DISK ADAPTER
DRAWING NO. 838-SM-07
REVISION NO. 1.0

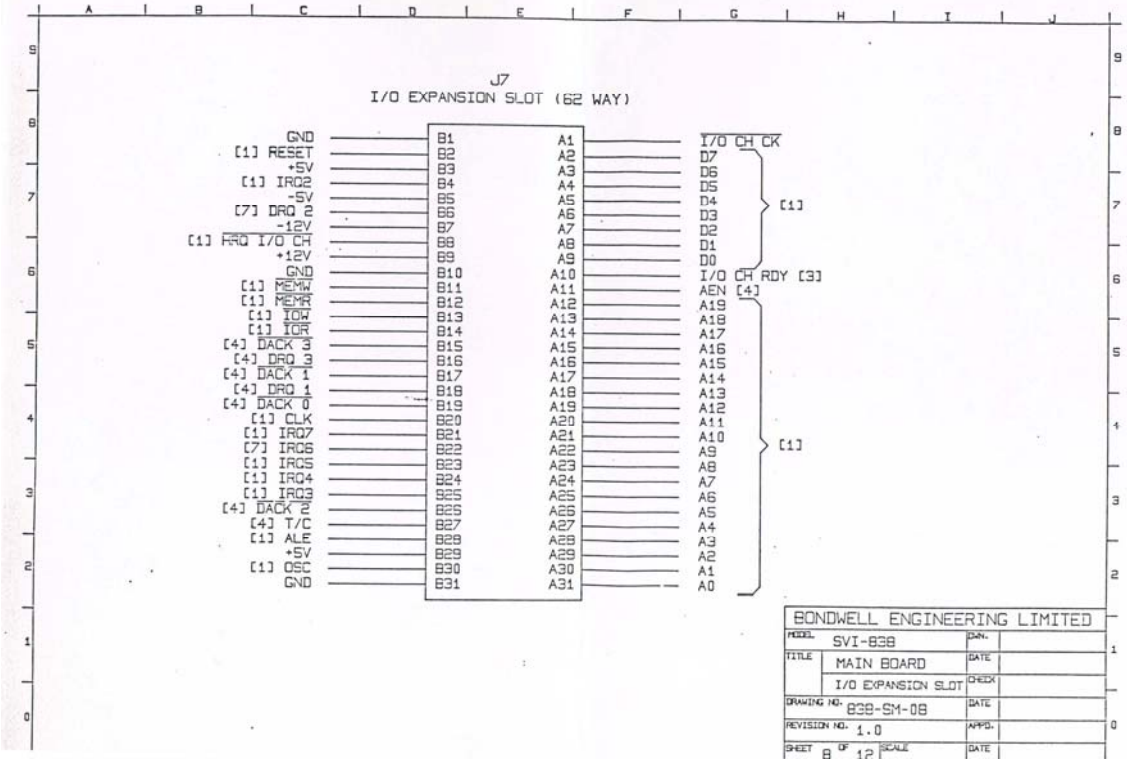
J7
I/O EXPANSION SLOT (62 WAY)
GND
[1] RESET
+5V
[1] IRQ2
-5V
[7] DRQ 2
-12V
[1] IRQ I/O CH
+12V
GND
[1] MEMW
[1] MEMR
[1] IOW
[1] IOR
[4] DACK 3
[4] DRQ 3
[4] DACK 1
[4] DRQ 1
[4] DACK 0
[1] CLK
[1] IRQ7
[7] IRQ6
[1] IRQ5
[1] IRQ4
[1] IRQ3
[4] DACK 2
[4] T/C
[1] ALE
+5V
[1] OSC
GND
I/O CH CK
D7
D6
D5
D4
D3
D2
D1
D0
[1]
I/O CH RDY [3]
AEN [4]
A19
A18
A17
A16
A15
A14
A13
A12
A11
A10
A9
A8
A7
A6
A5
A4
A3
A2
A1
A0
[1]
BONDWELL ENGINEERING LIMITED
MODEL SVI-838
TITLE MAIN BOARD
I/O EXPANSION SLOT
DRAWING NO. 838-SM-08
REVISION NO. 1.0
SHEET 8 OF 12

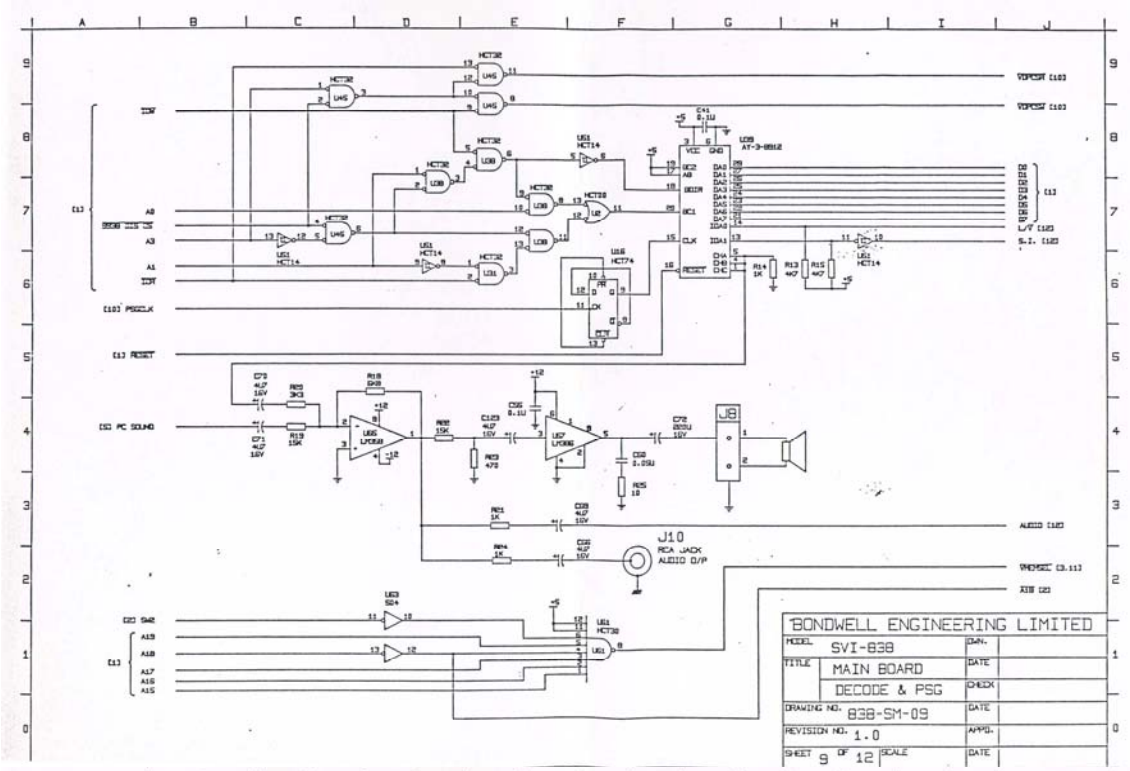
J10
RCA JACK
AUDIO O/P
J8
BONDWELL ENGINEERING LIMITED
MODEL SVI-838
TITLE MAIN BOARD
DECODE & PSG
DRAWING NO. 838-SM-09
REVISION NO. 1.0
SHEET 9 OF 12

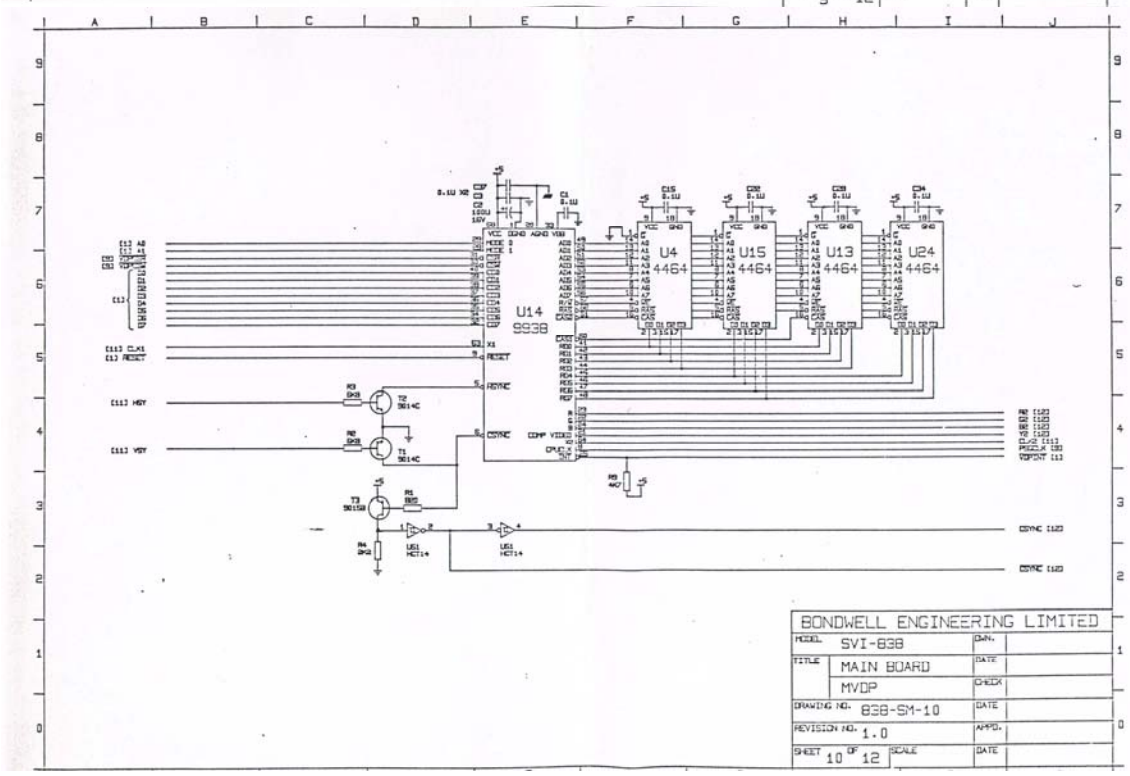
U14
9938
U4
4464
U15
4464
U13
4464
U24
4464
BONDWELL ENGINEERING LIMITED
MODEL SVI-838
TITLE MAIN BOARD
MVDP
DRAWING NO. 838-SM-10
REVISION NO. 1.0
SHEET 10 OF 12

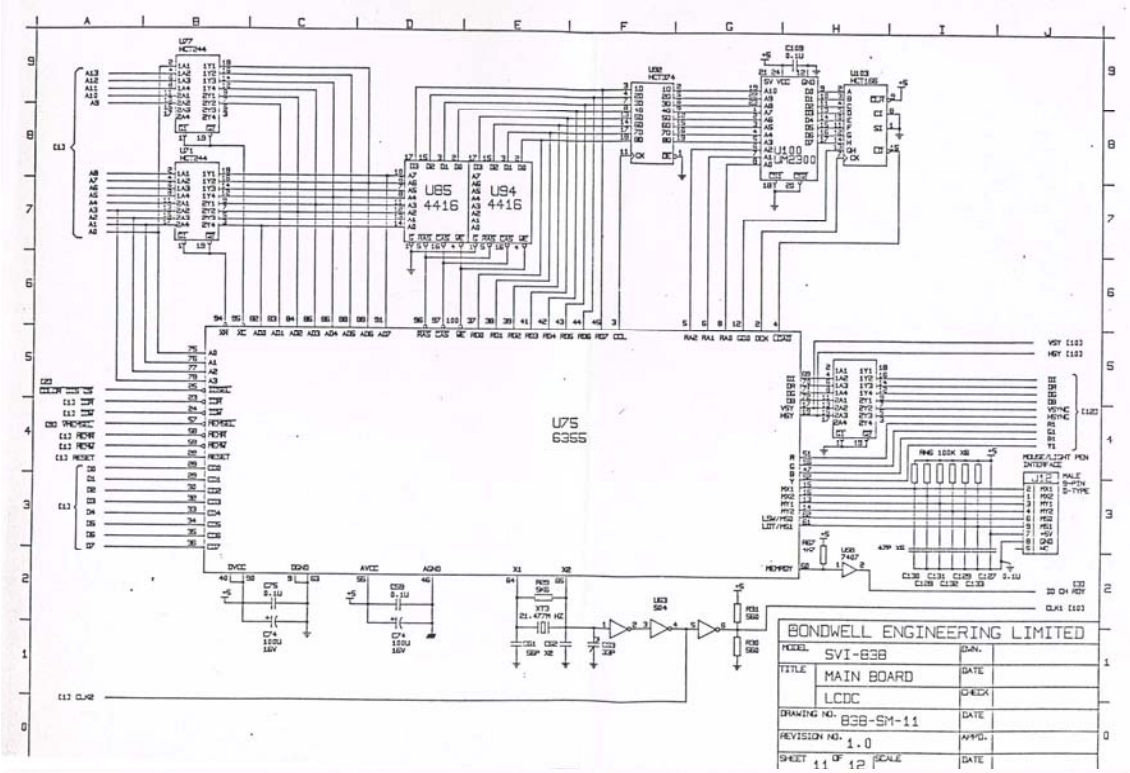
U85
4416
U94
4416
U100
UM2300
U75
6355
BONDWELL ENGINEERING LIMITED
MODEL SVI-838
TITLE MAIN BOARD
LCDC
DRAWING NO. 838-SM-11
REVISION NO. 1.0
SHEET 11 OF 12

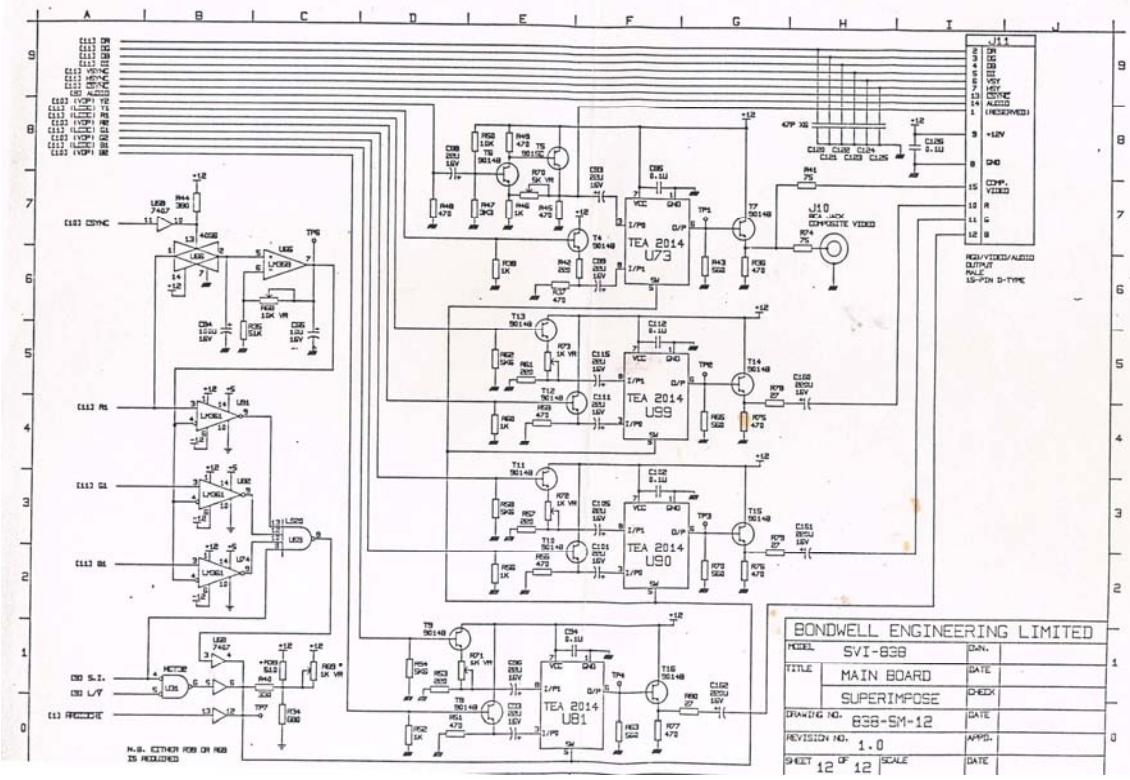
TEA 2014
U73
TEA 2014
U99
TEA 2014
U90
TEA 2014
U81
J10
J11
BONDWELL ENGINEERING LIMITED
MODEL SVI-838
TITLE MAIN BOARD
SUPERIMPOSE
DRAWING NO. 838-SM-12
REVISION NO. 1.0
SHEET 12 OF 12